MERCRUISER (454 MAG. MPI HORIZON (GEN. VI) GM 454 V-8)
Serial Nbr Range: 0L086050 THRU 0L674000 ()

Flywheel Housing

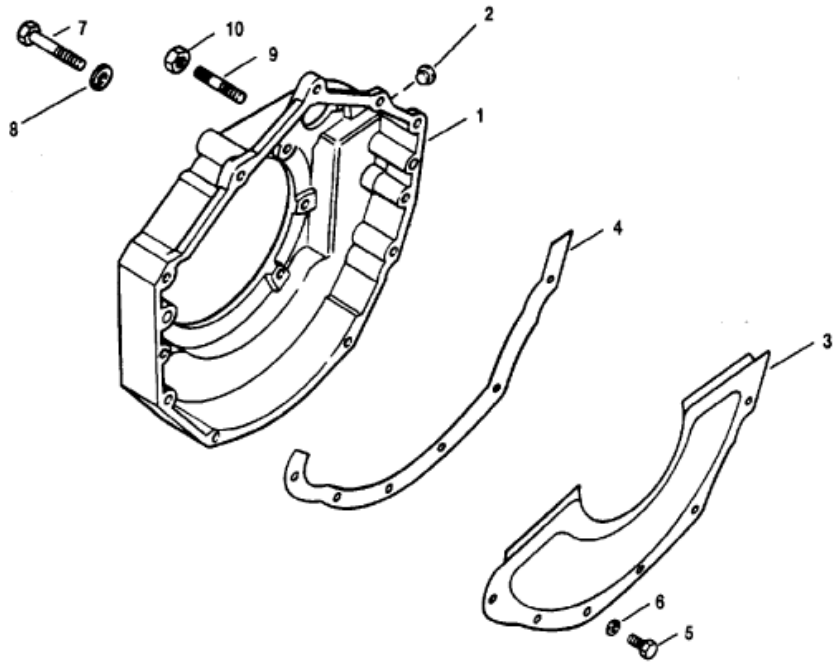

Parts List

Ref	Class	Part	Description	Qty	Comment	Footnote
1		814309A 1	HOUSING ASSEMBLY	1		
2	19	12304	PLUG	1		
3		818718A 4	COVER ASSEMBLY	1		
4	27	86015	GASKET	1		
5	10	98253	SCREW, (.250-20 x .500)	5		
6	13	26992	LOCKWASHER, (.250)	5		
7	10	47277	SCREW, (.312-24 x .750)	1		
7	10	34353	SCREW, (.375-16 x 1.00)	1		
7	10	37612	SCREW, (.375-16 x 1.250)	2		
7	10	47688	SCREW, (.375-16 x 2.750)	2		
8	13	39107	LOCKWASHER, (.312)	1		
8	13	35048	LOCKWASHER, (.375)	5		
9	16	861316	STUD (STAINLESS STEEL)	2		
10	11	99405	NUT (3/8-16) (BRASS)	2		